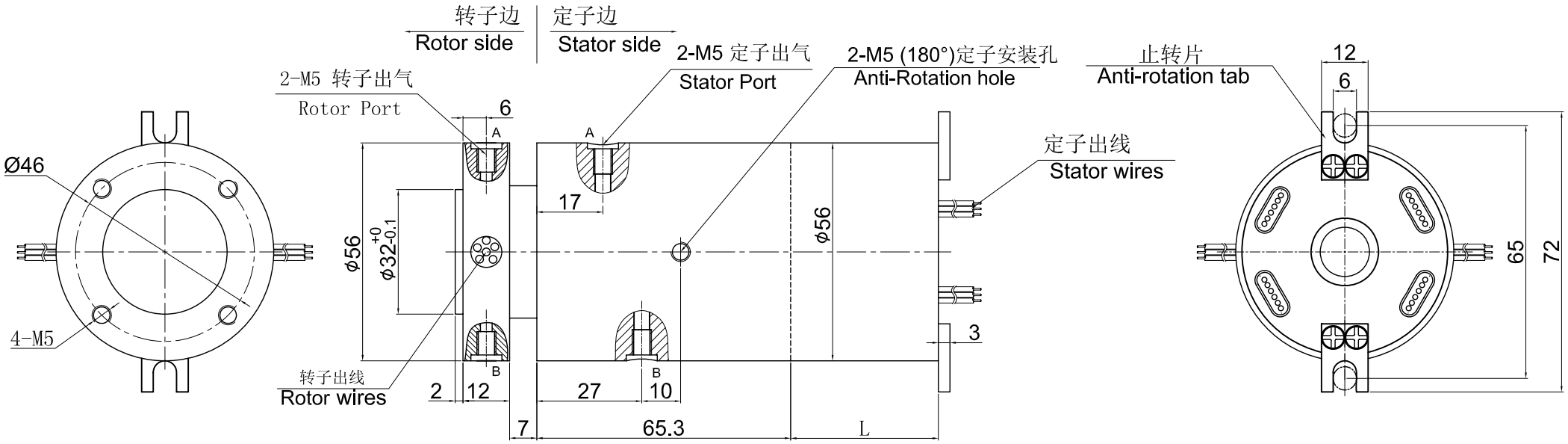
转子边
Rotor side
定子边
Stator side
2-M5 定子出气
Stator Port
2-M5 (180°)定子安装孔
Anti-Rotation hole
止转片
Anti-rotation tab
2-M5 转子出气
Rotor Port
定子出线
Stator wires
转子出线
Rotor wires
Ø46
4-M5
6
A
B
17
27
10
2
12
7
65.3
L
3
φ56
φ32+0 -0.1
φ56
12
6
65
72