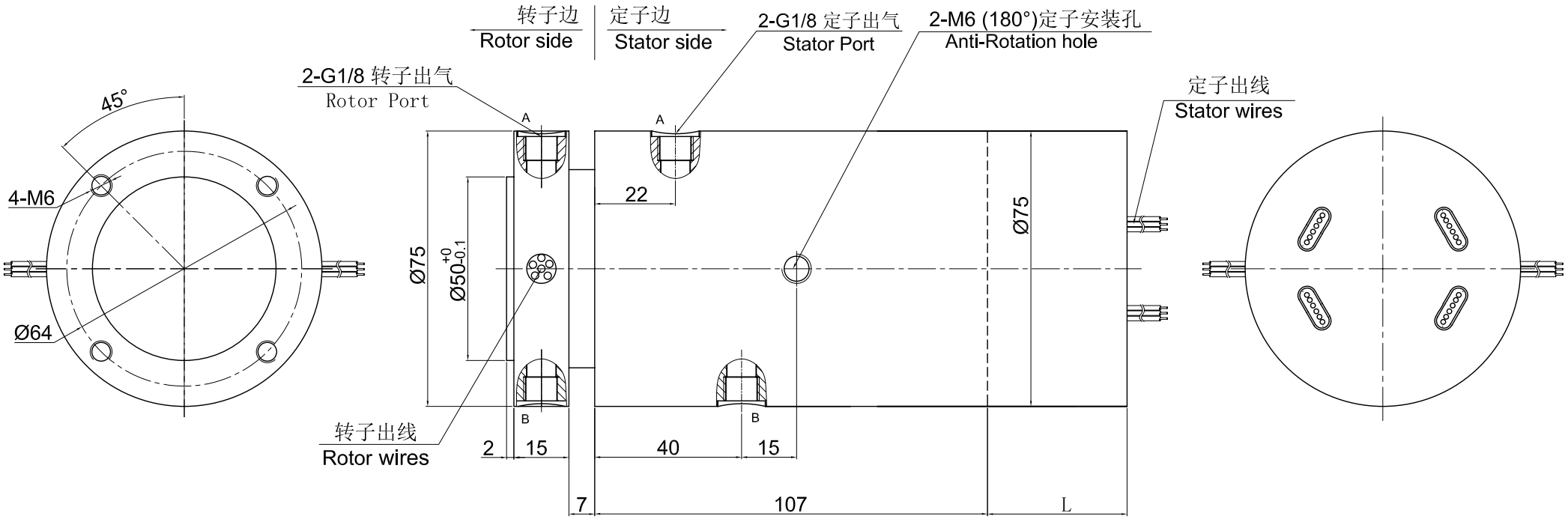
转子边
Rotor side
定子边
Stator side
2-G1/8 定子出气
Stator Port
2-M6 (180°)定子安装孔
Anti-Rotation hole
2-G1/8 转子出气
Rotor Port
定子出线
Stator wires
45°
4-M6
Ø64
Ø75
Ø50+0 -0.1
A
A
B
B
22
Ø75
转子出线
Rotor wires
2
15
40
15
7
107
L