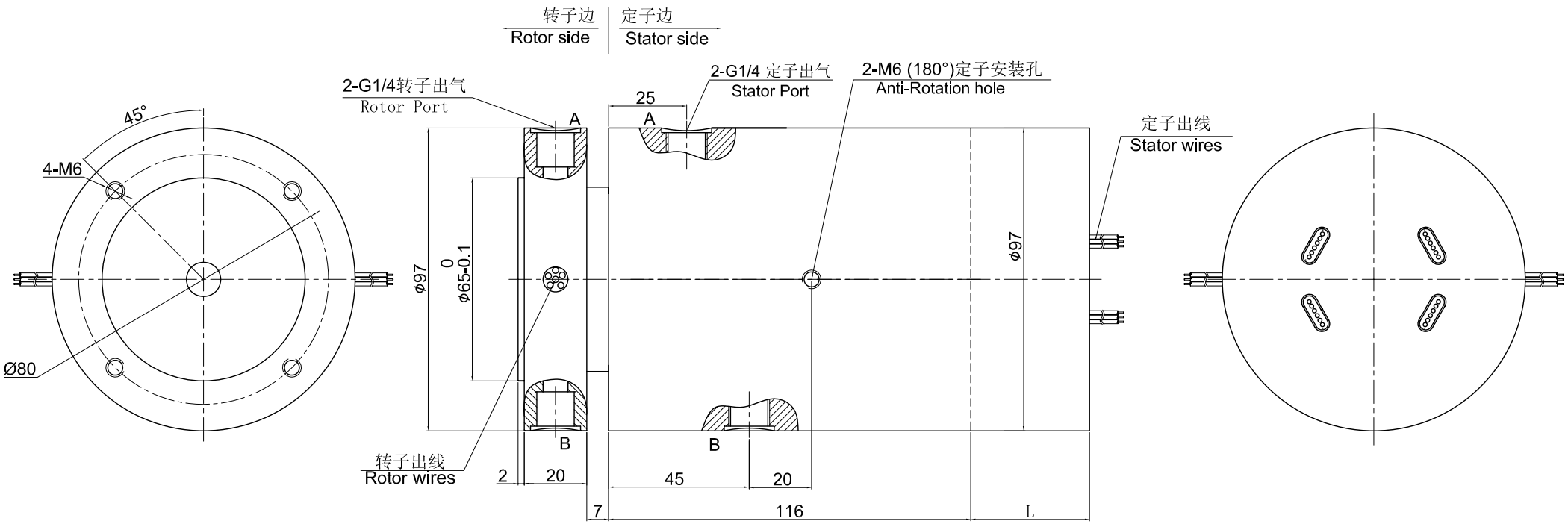
转子边
Rotor side
定子边
Stator side
2-G1/4转子出气
Rotor Port
2-G1/4 定子出气
Stator Port
2-M6 (180°)定子安装孔
Anti-Rotation hole
定子出线
Stator wires
45°
4-M6
Ø80
25
A
A
B
B
ø97
0
ø65-0.1
ø67
转子出线
Rotor wires
2
20
45
20
7
116
L