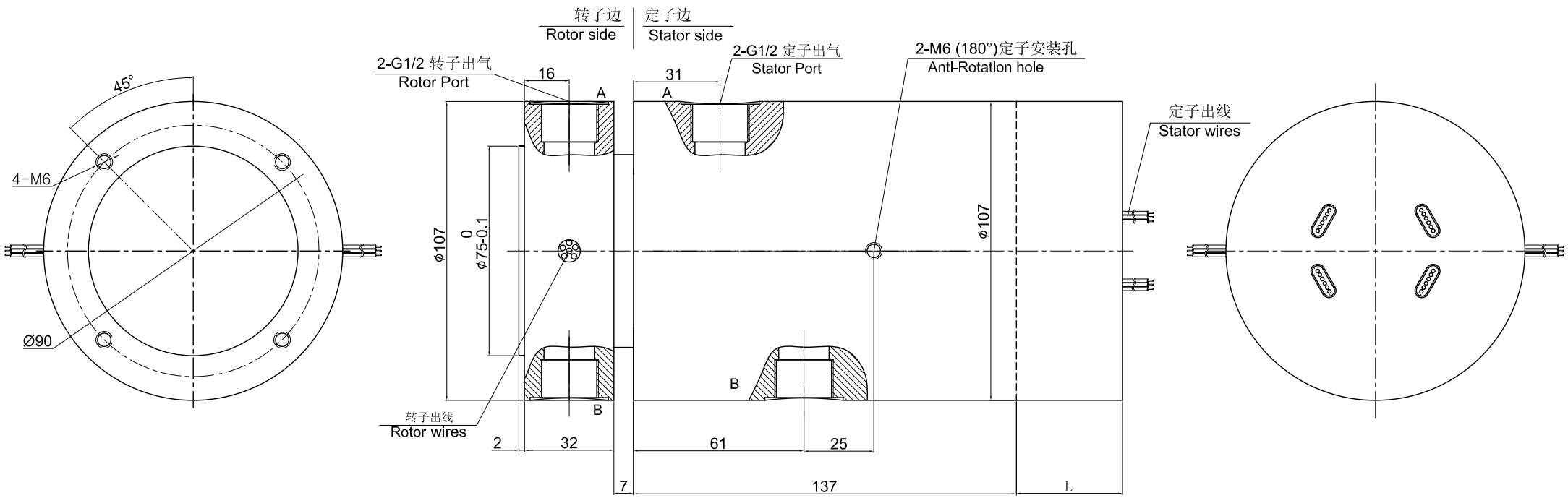
转子边
Rotor side
定子边
Stator side
2-G1/2 转子出气
Rotor Port
2-G1/2 定子出气
Stator Port
2-M6 (180°)定子安装孔
Anti-Rotation hole
定子出线
Stator wires
45°
4-M6
Ø90
16
31
A
A
B
B
ø107
ø75-0.1
0
ø107
转子出线
Rotor wires
2
32
61
25
7
137
L